Instant Cladding Quick Start

Here is the Instant Cladding tool bar:

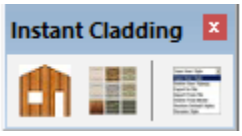

Lesson 1. Cladding using Preset Style *Styles are simply saved sets of parameters. Cladding styles can be made from scratch by setting parameters or can be made by selecting a Preset style and modifying it as desired.*

1.1 Draw a box in your model and select all the faces and edges

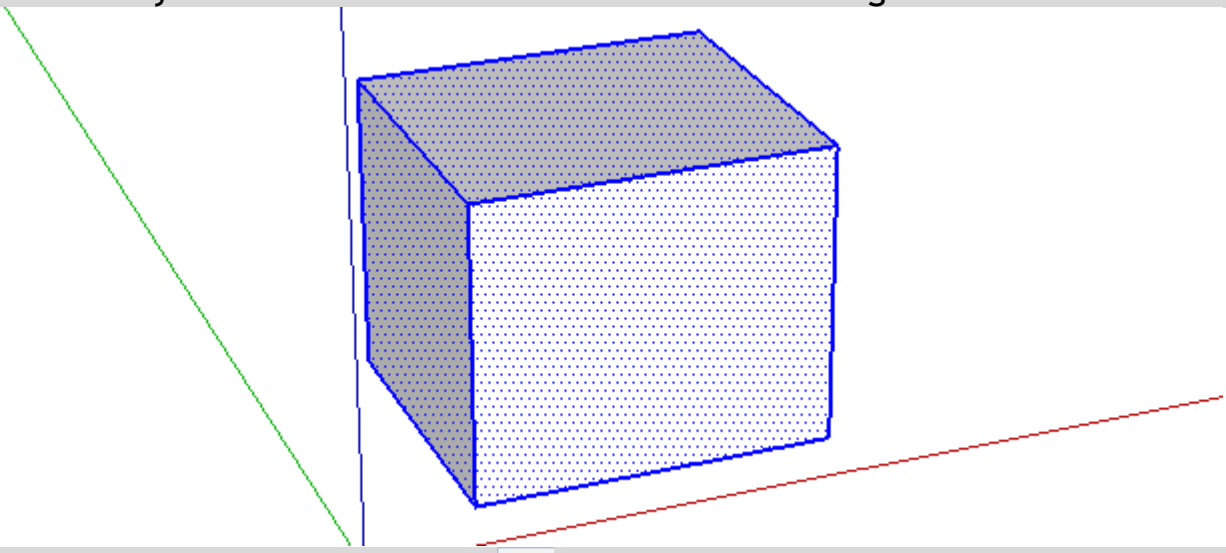

1.2 Click the Instant Cladding toolbar icon. Click the image menu button to display preset style images and select “Board Batten 1” style.

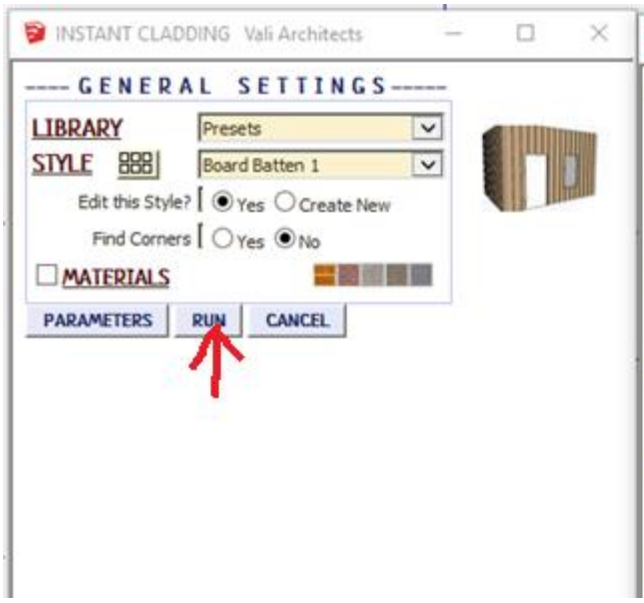

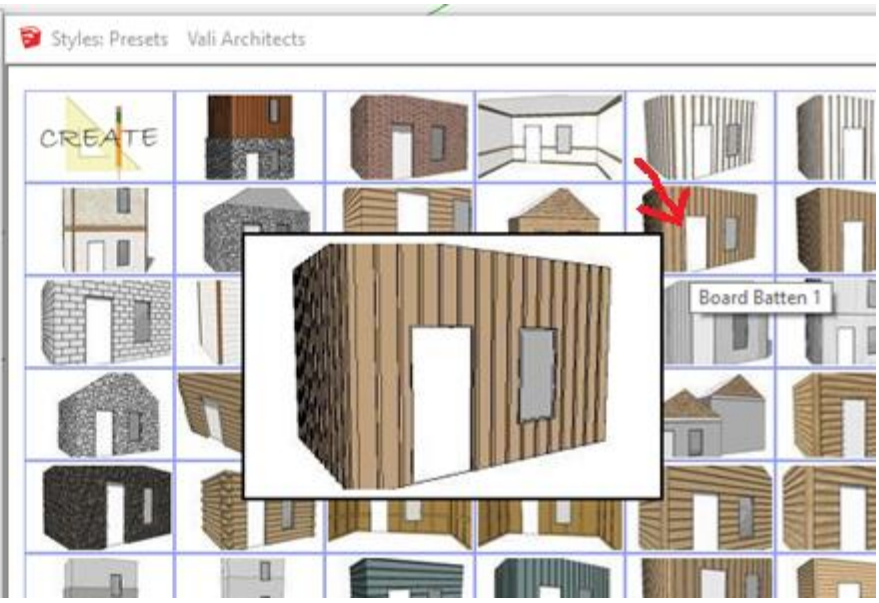

1.3 Click “Run”. The result will be similar to what is shown below.

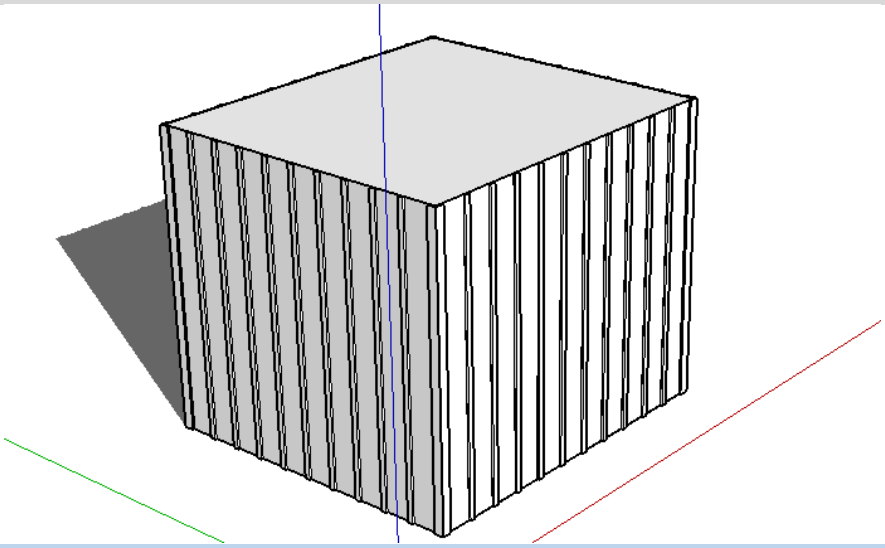

Lesson 2. Wall Cutouts

Cladding is placed on the front side of vertical faces, and corners are placed where 2 vertical faces intersect. It will cut around holes. It can also cut around some components such as any selected windows and doors that are glued to the face if there is a face surrounding the component. (I will go into more detail in another pdf tutorial) ***If using my Instant Door and Window plugin, version 2.2 has been updated to work better with Instant Cladding.***

2.1 Click Undo to remove the cladding made in lesson 1, or draw a new box. Make a cutout in one of the sides. Place a door or window component in one of the faces as well. (I downloaded one from the warehouse) If you have Instant Window, make the default window as 2d and place it on one of the sides as well.

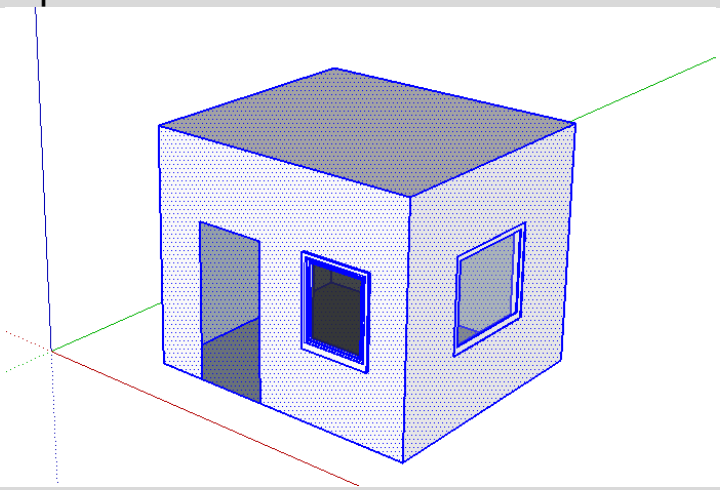

2.2 Repeat steps 1.2 and 1.3 above and select the window components also. The result should be something like what is shown below.

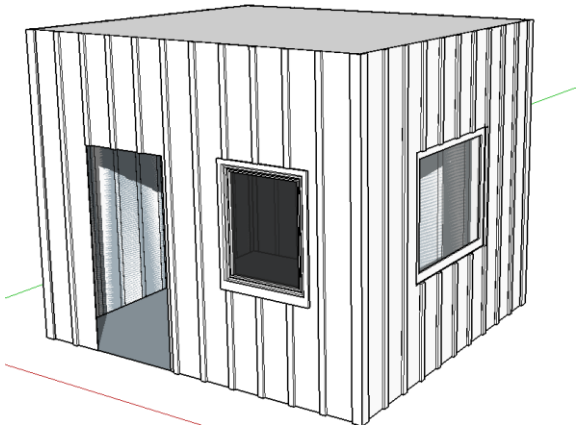

Lesson 3. Materials *Aligned textures can be applied to the cladding but must first be loaded into the model using standard Sketchup methods. Textures can be applied in 2 ways: either when modeling the Cladding as shown here, or using the Add Materials tool to apply or change materials as shown in Lesson 4.*

3.1 Click Undo to remove the cladding made in lesson 2, or draw a new box. Load the materials supplied with the extension by clicking "Plugins/Vali Architects/Instant Cladding/Load Vali Architects Cladding Materials"

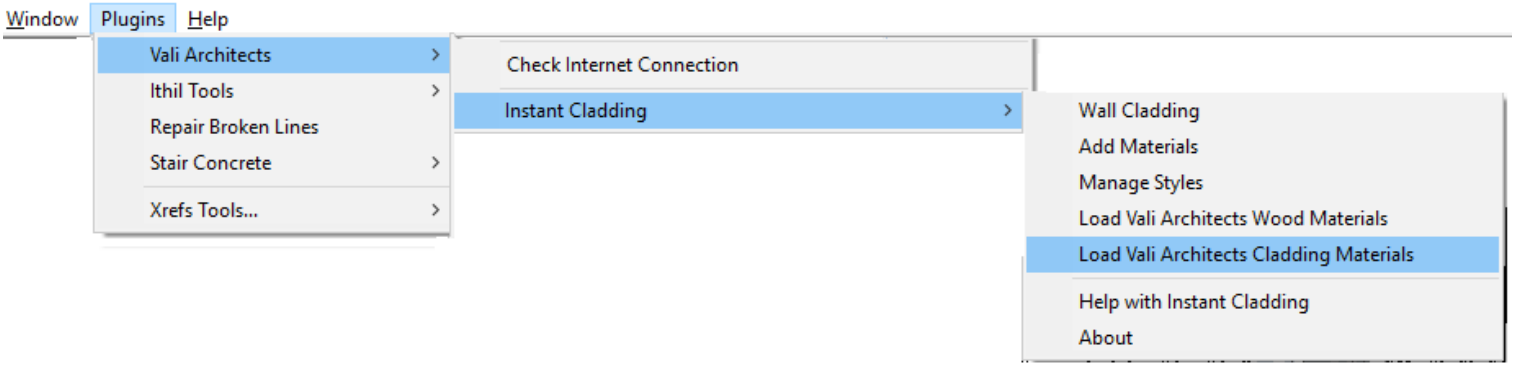

3.2 Select the box and window components again.

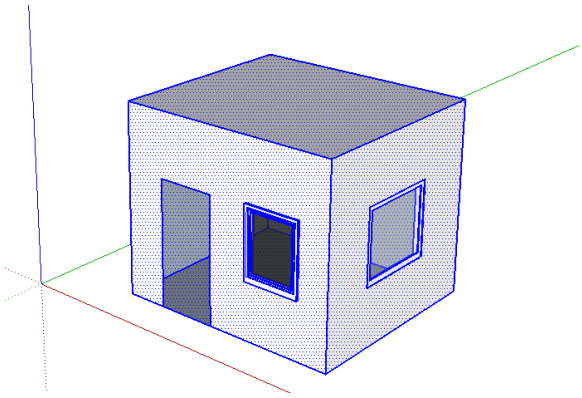

3.3 Click the Instant Cladding toolbar  icon. Click the image menu button  to display preset style images and select "Dovetail 2" style.

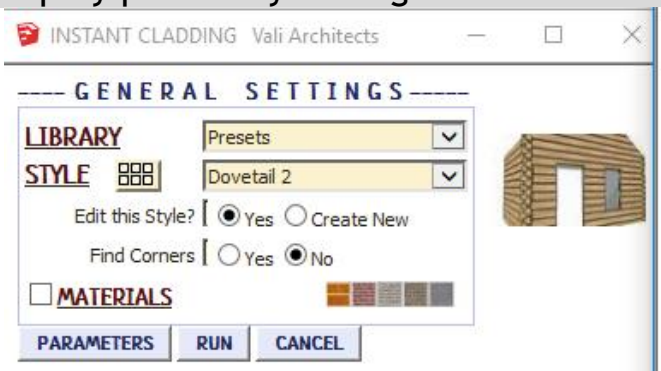

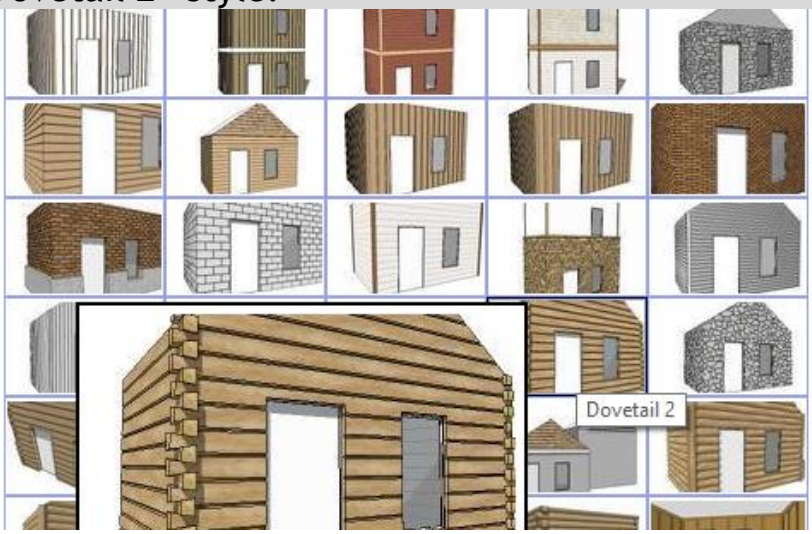

3.4 Check Materials and select vaLog1 for Logs and vaLogEnd1 for Log Ends.

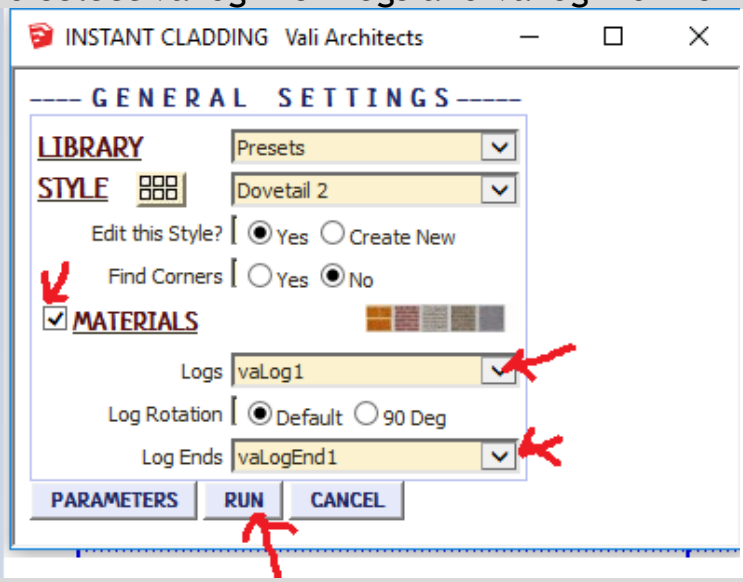

3.5 After clicking “Run” the result should be similar to what is shown below

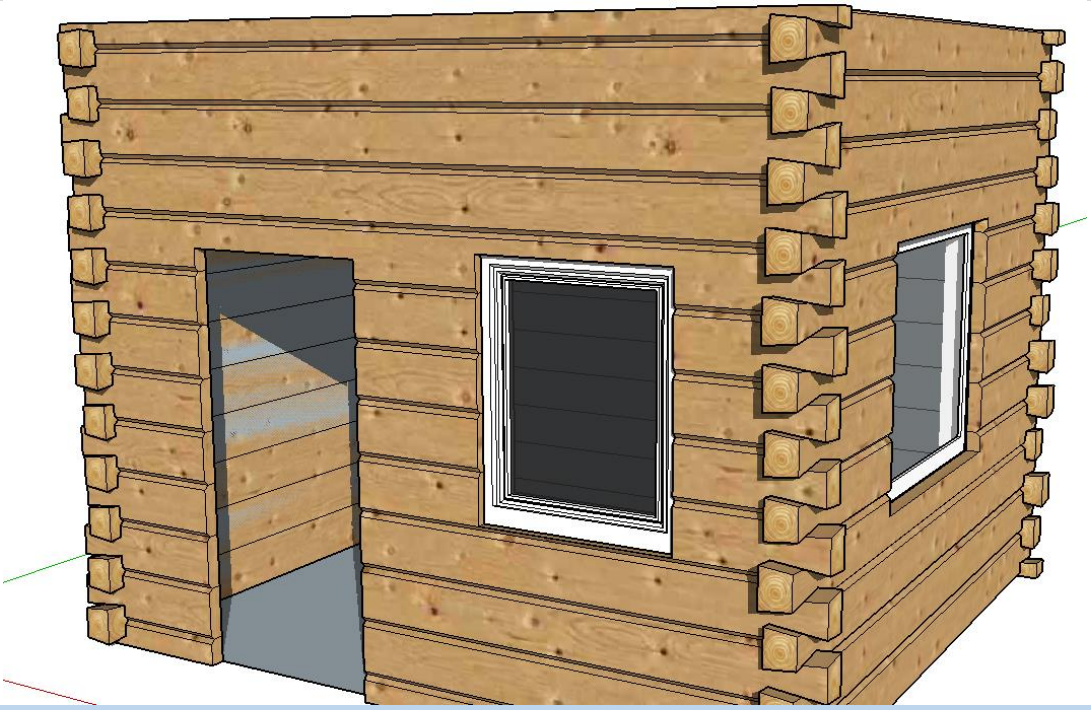

Lesson 4. Change Materials

4.1 Select the groups containing the log siding.



4.2 Click the Cladding toolbar  icon.

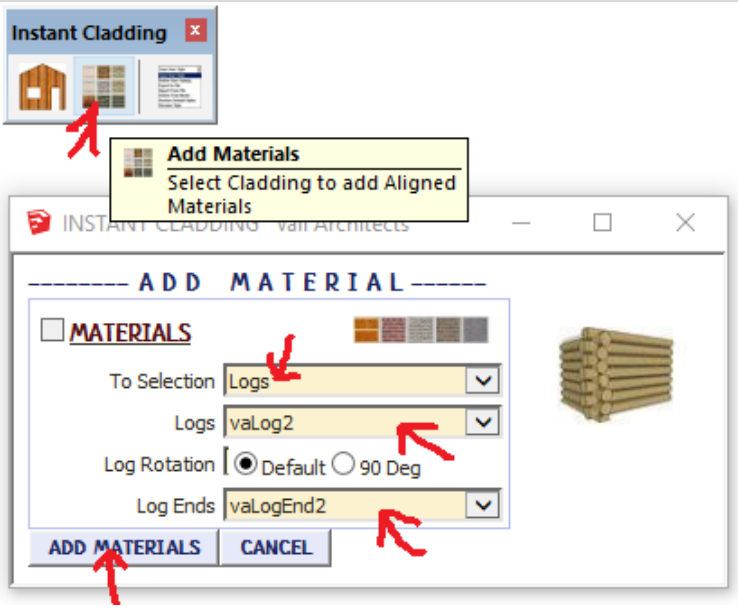

4.3 Set the To Selection parameter to 'Logs', the Logs Parameter to 'vaLog2' and Log Ends to 'vaLogEnd2'. Click ADD MATERIALS. The result should be similar to what is shown below.

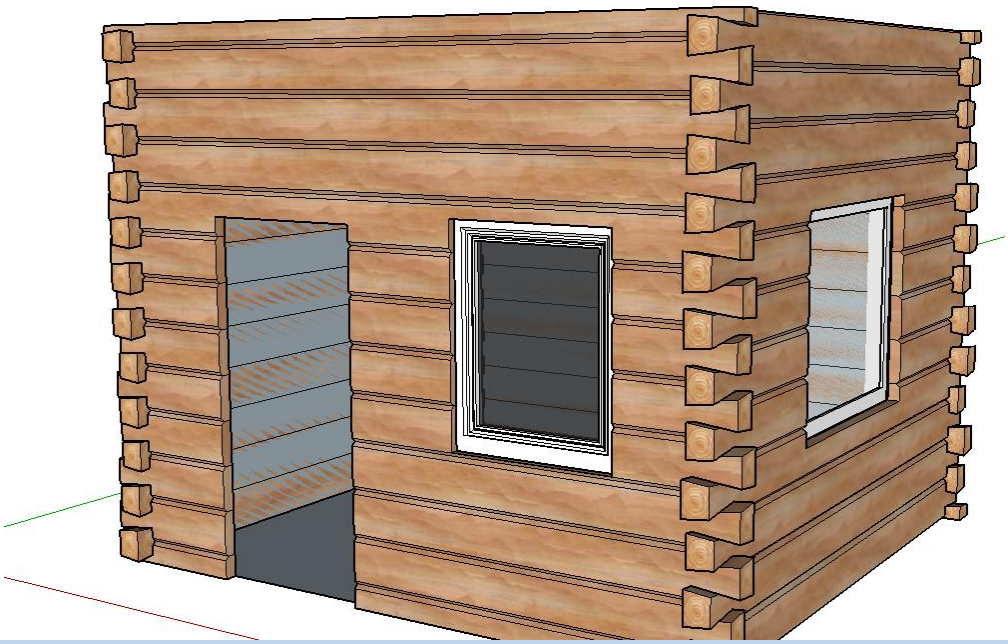

Lesson 5. Wainscot

5.1 Click Undo to remove the cladding made in lesson 4, or draw a new box. Select the box and window components again.

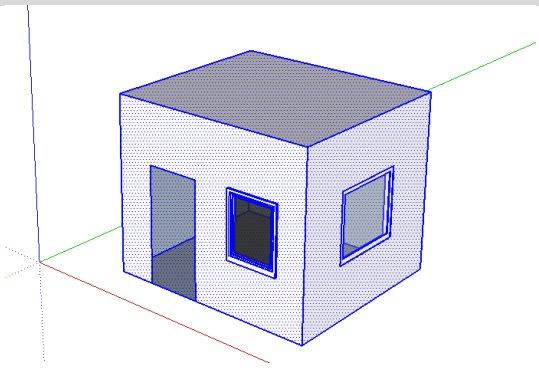

5.2 Click the Instant Cladding toolbar icon. Click the image menu button to display preset style images and select “Stone Bevel” style.

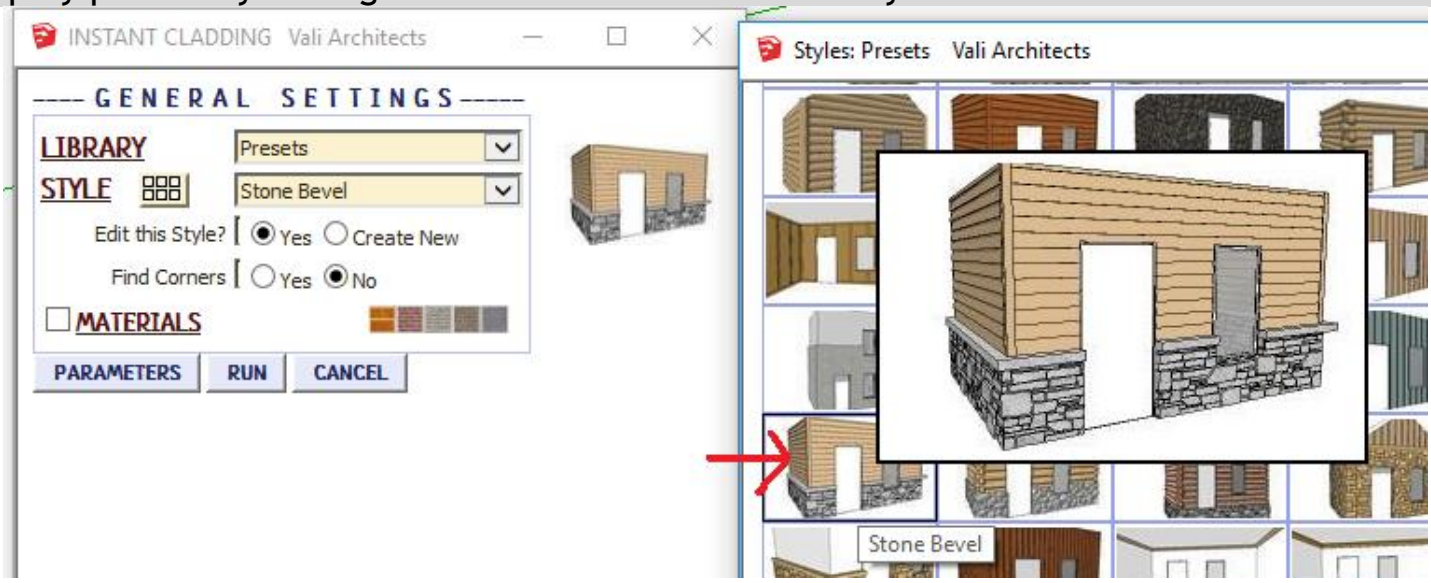

5.3 Check Materials and select the parameters shown below. Click ‘Run’.

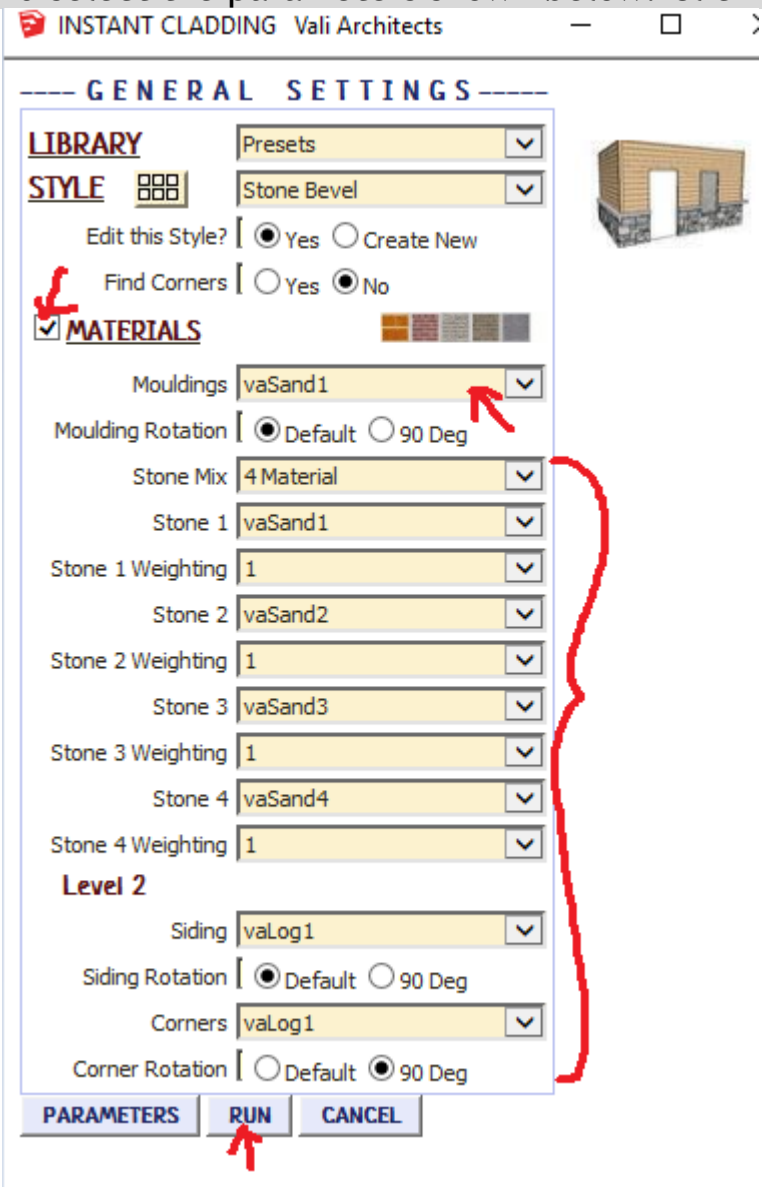

5.3 Even in small areas, stone can take a long time. Especially when stone corner type is set to ‘miter’. When stone is to be applied, a pop-up window will remind you to save your model before continuing. It is recommended that you click ‘File/Save’ before continuing.

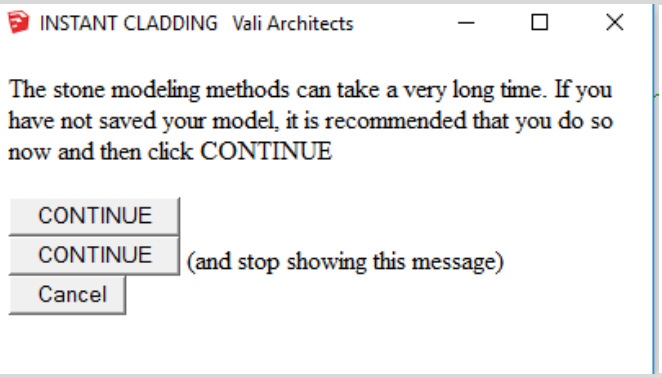

5.4 The result should be similar to what is shown below.

